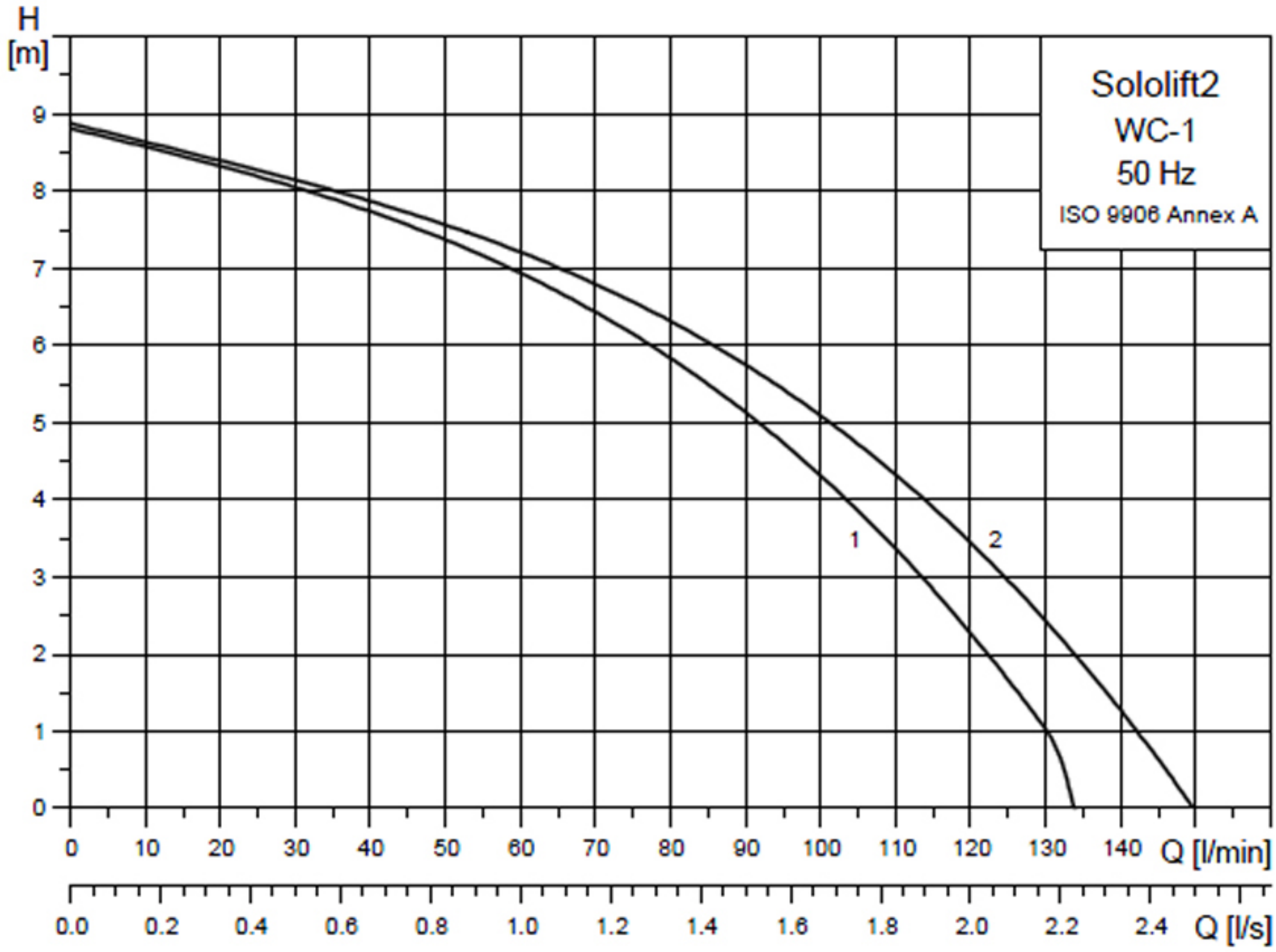
H
[m]
Sololift2
WC-1
50 Hz
ISO 9906 Annex A
1
2
Q [l/min]
Q [l/s]

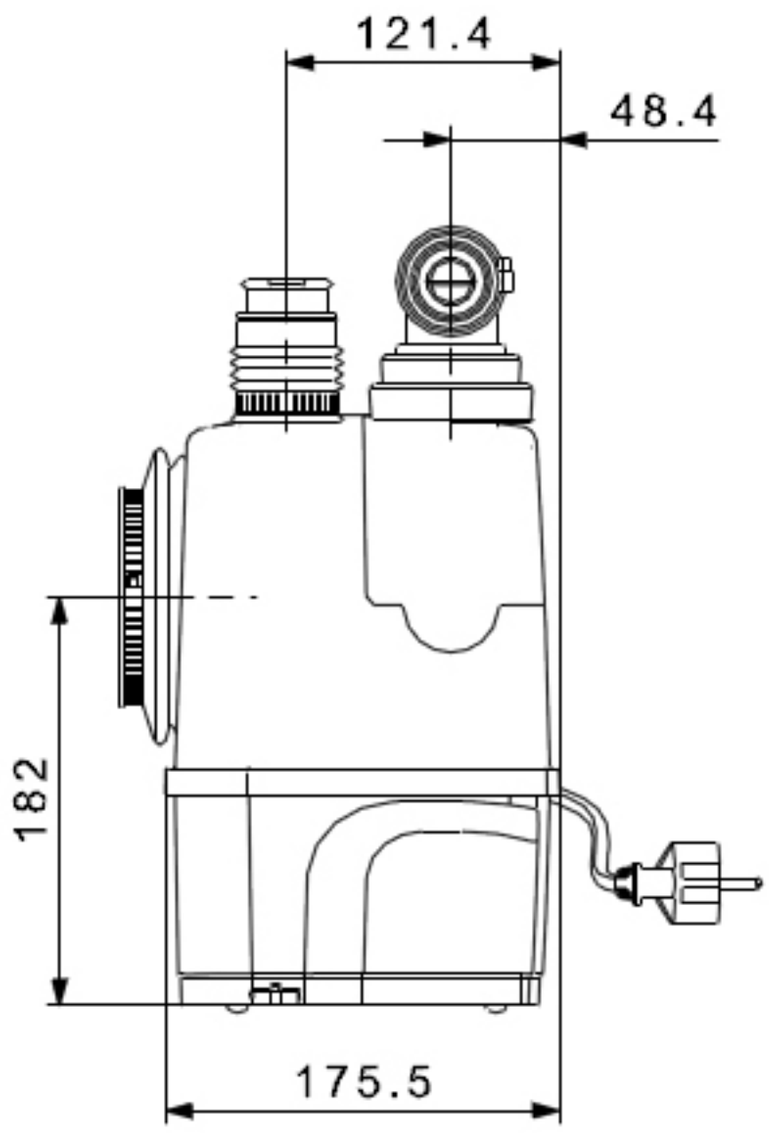
121.4
48.4
182
175.5

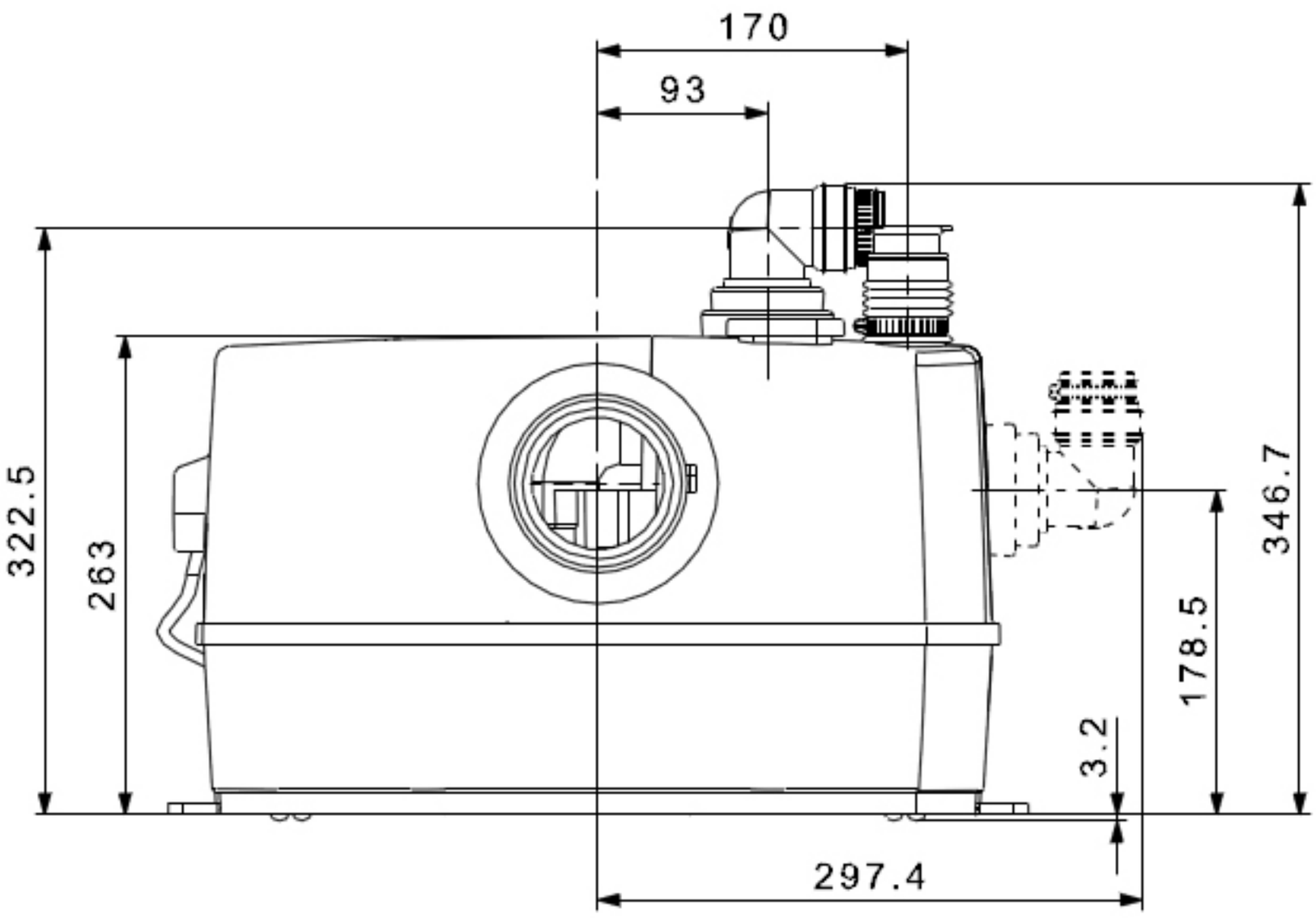
170
93
322.5
263
346.7
178.5
3.2
297.4

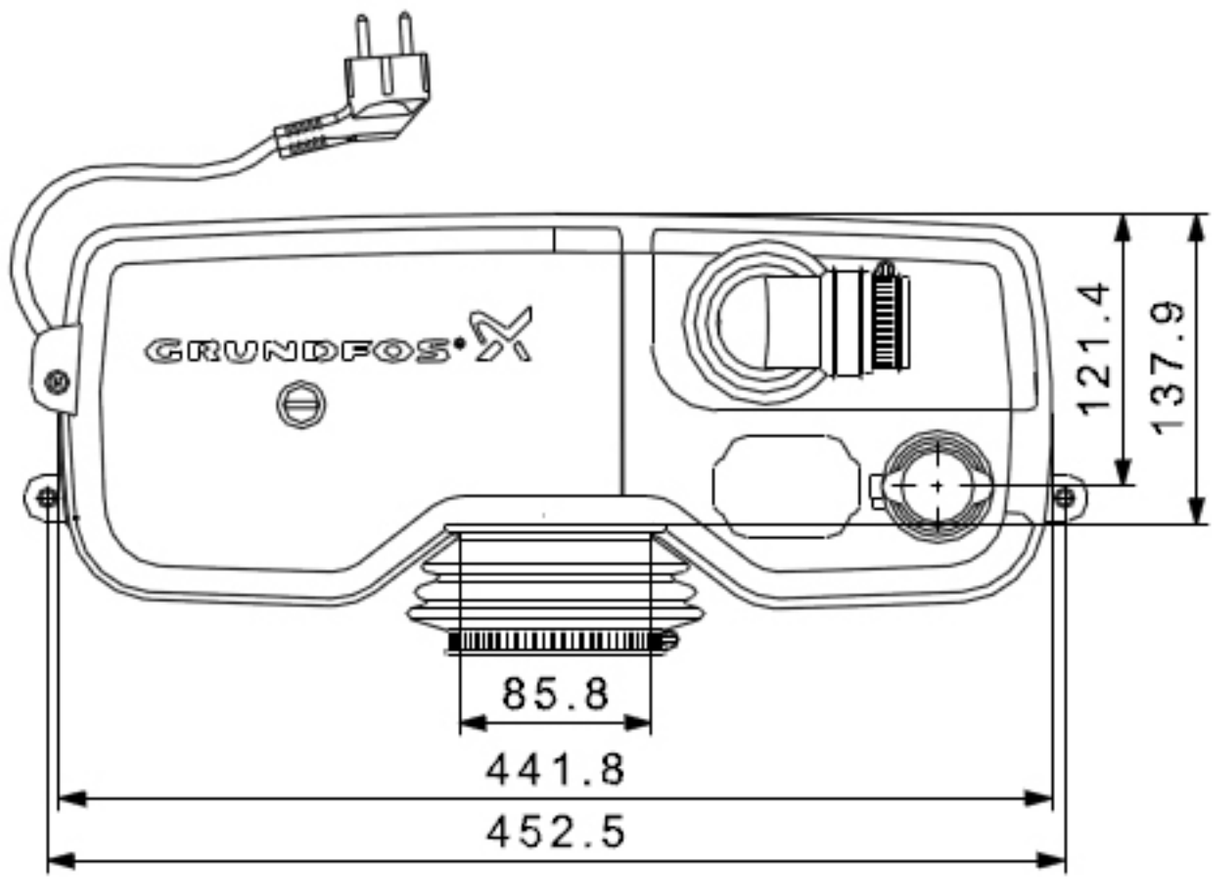
GRUNDFOS
121.4
137.9
85.8
441.8
452.5

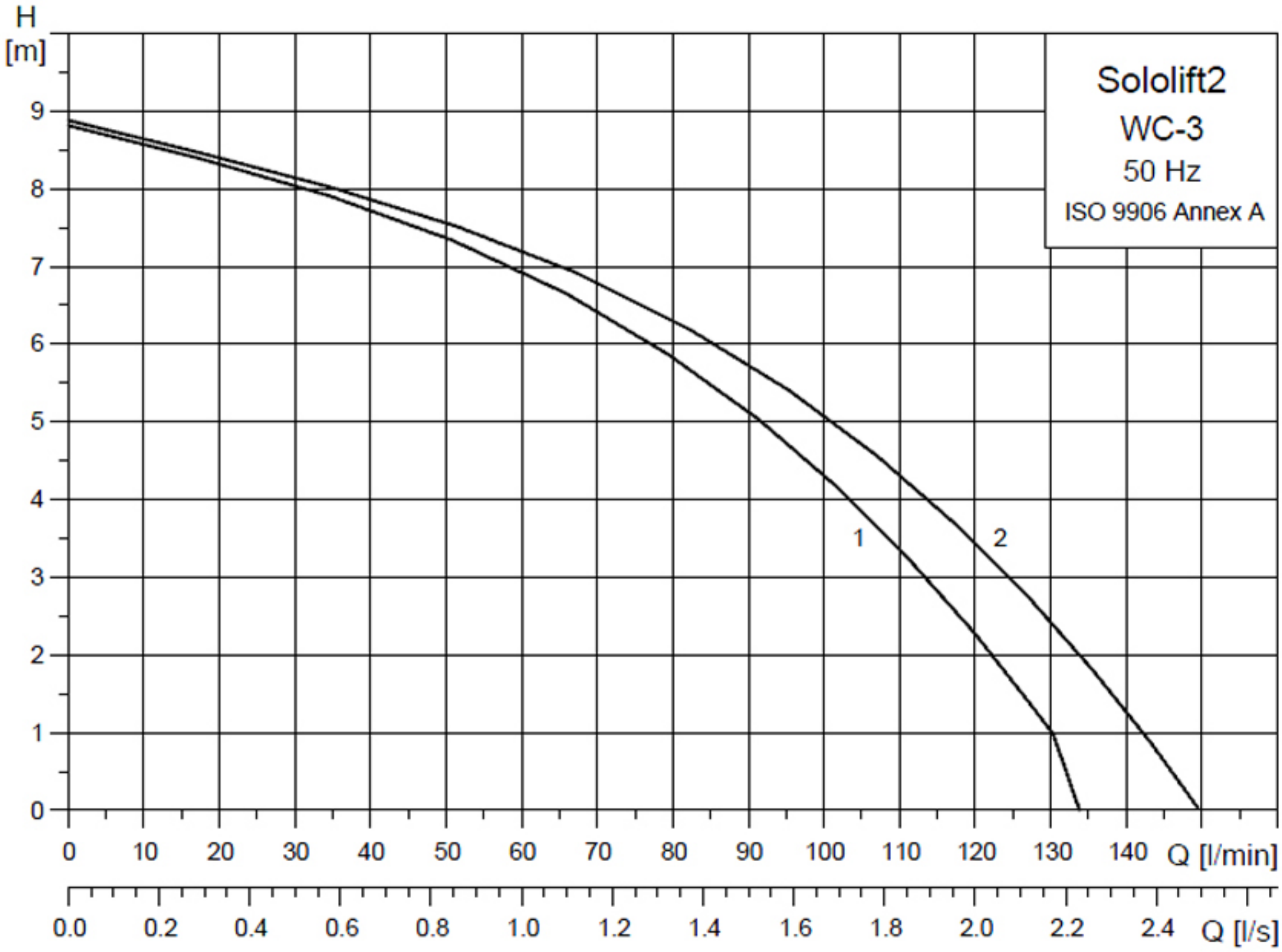
H
[m]
Sololift2
WC-3
50 Hz
ISO 9906 Annex A
1
2
Q [l/min]
Q [l/s]

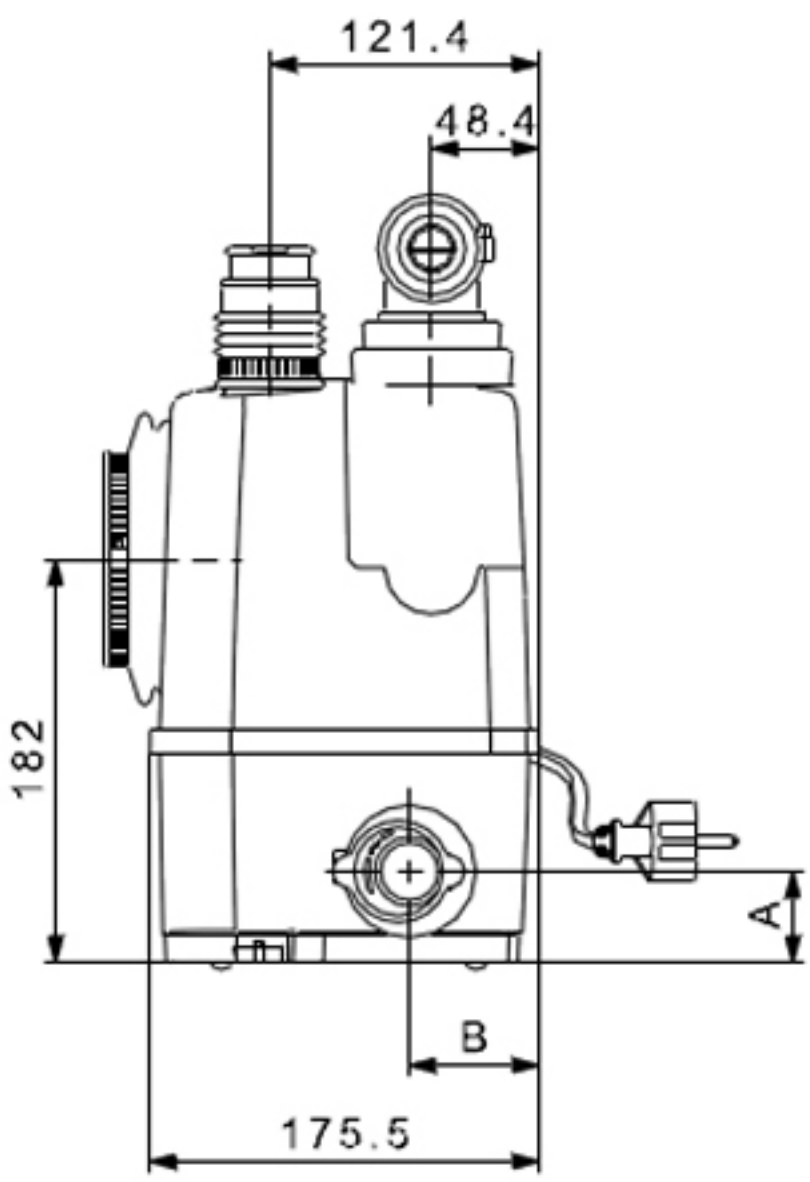
121.4
48.4
182
A
B
175.5

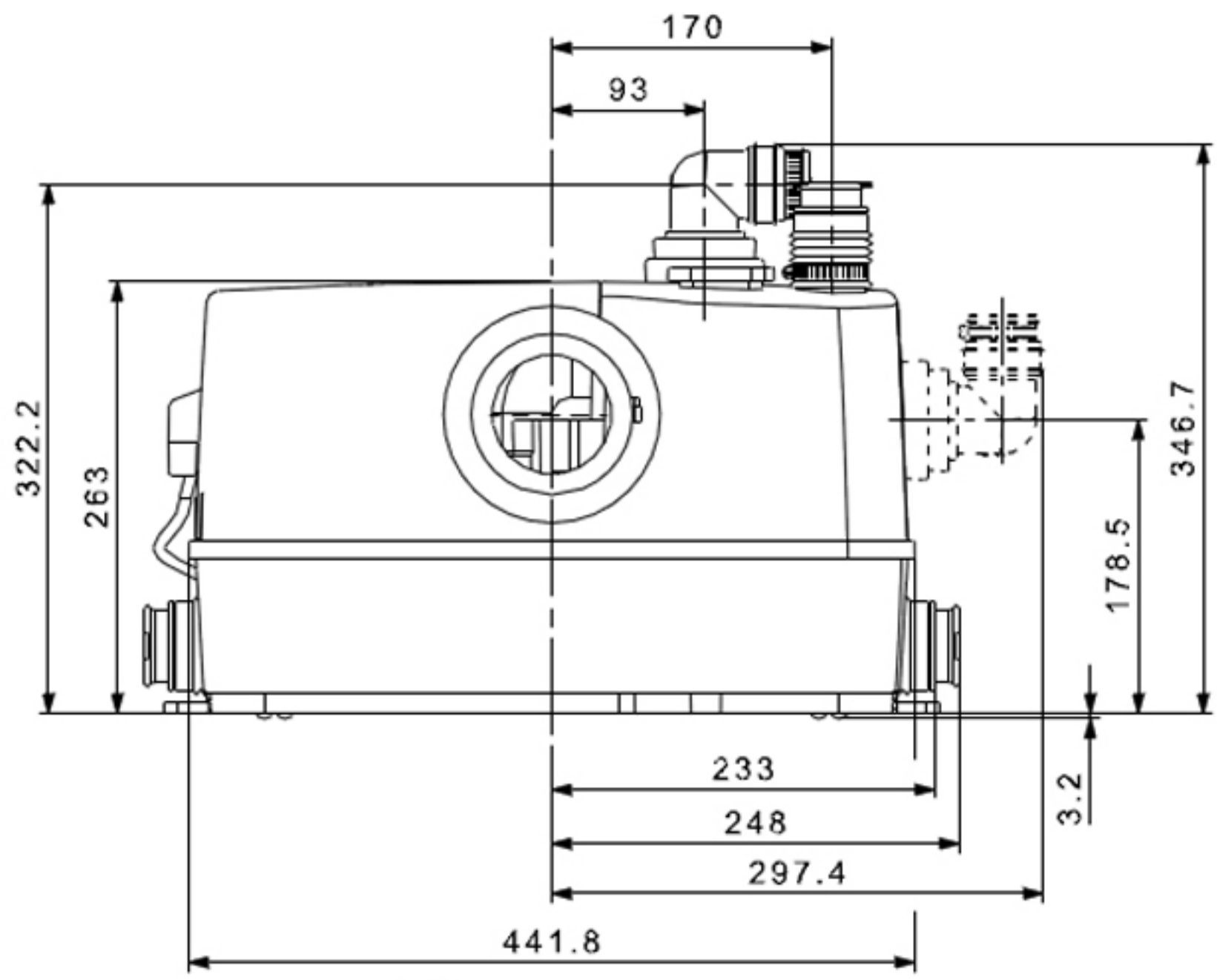
170
93
322.2
263
346.7
178.5
233
248
297.4
441.8
3.2

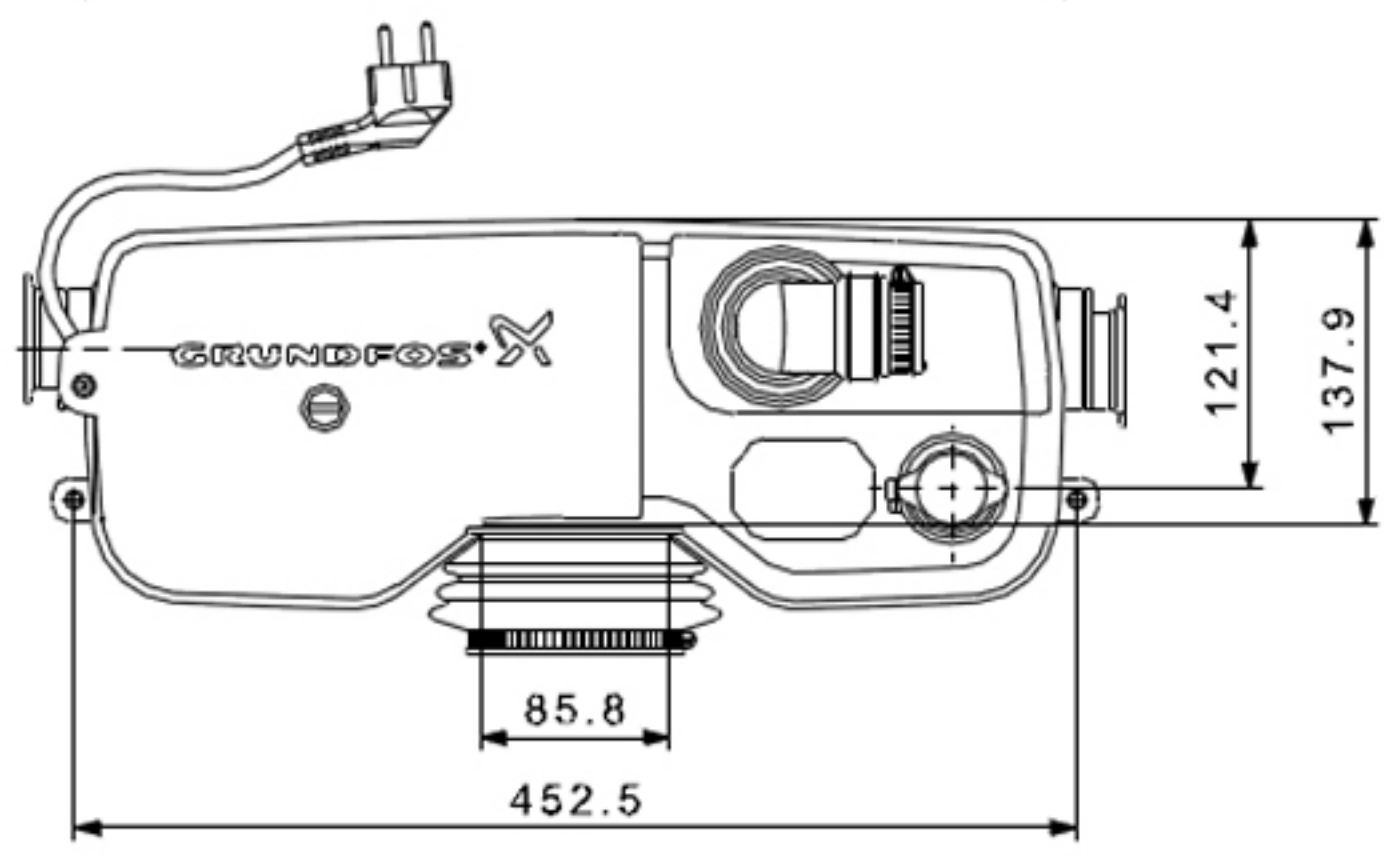
GRUNDFOS
121.4
137.9
85.8
452.5

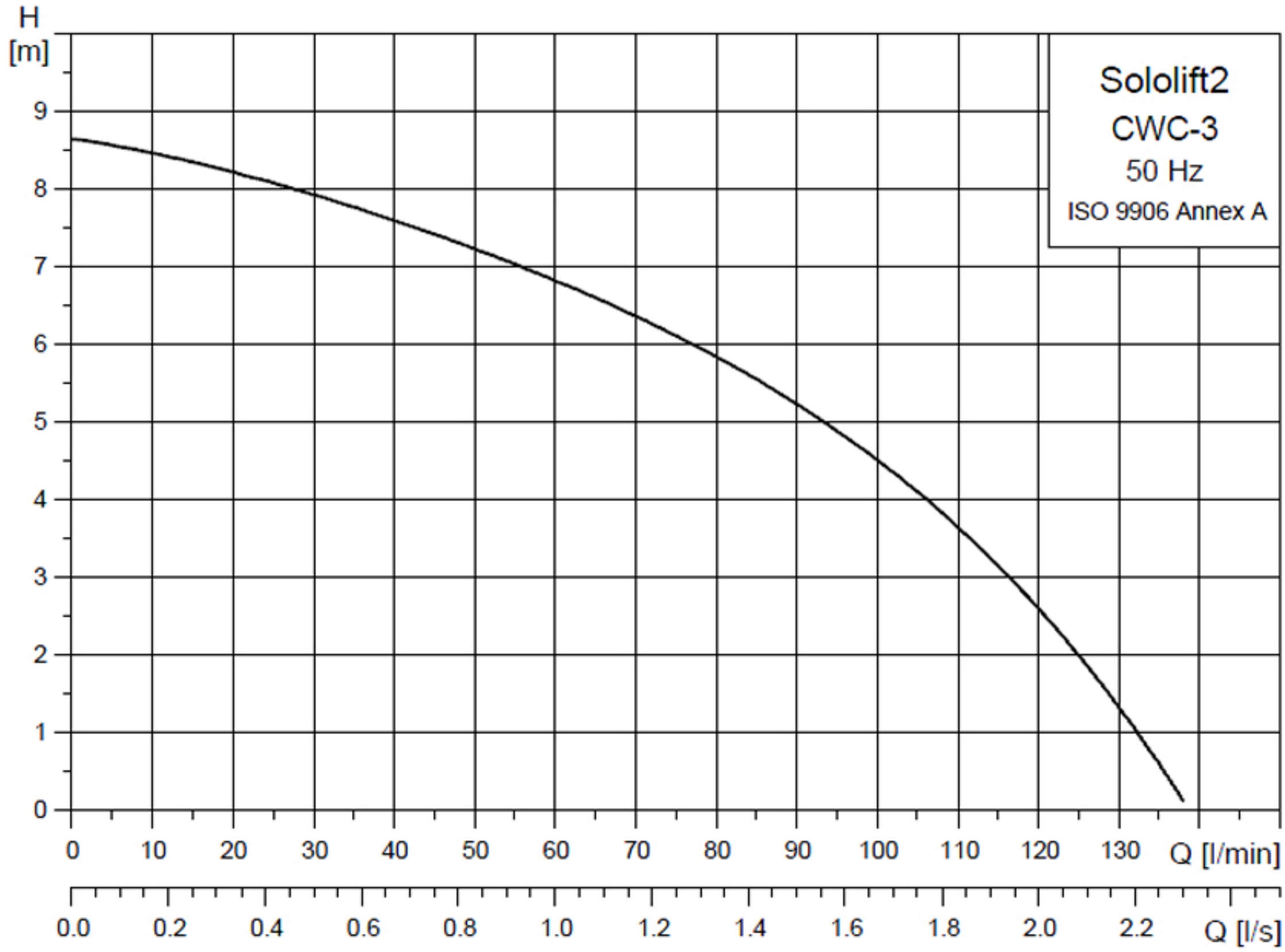
H
[m]
9
8
7
6
5
4
3
2
1
0
Sololift2
CWC-3
50 Hz
ISO 9906 Annex A
0
10
20
30
40
50
60
70
80
90
100
110
120
130
Q [l/min]
0.0
0.2
0.4
0.6
0.8
1.0
1.2
1.4
1.6
1.8
2.0
2.2
Q [l/s]

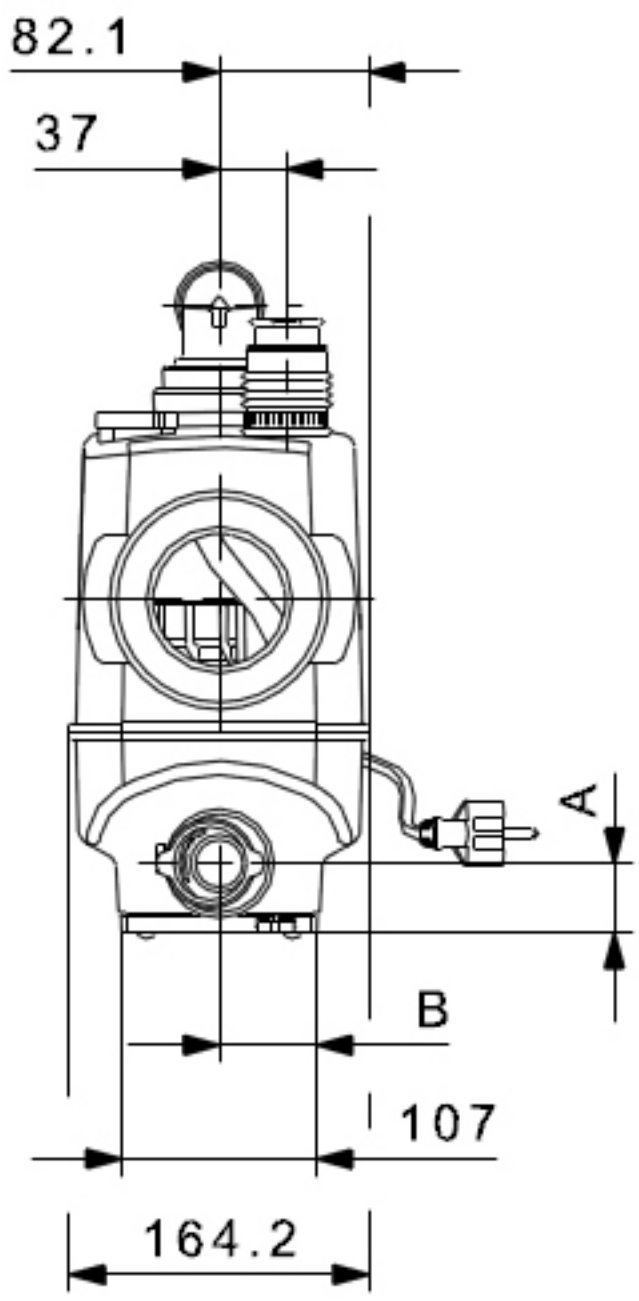
82.1
37
A
B
107
164.2

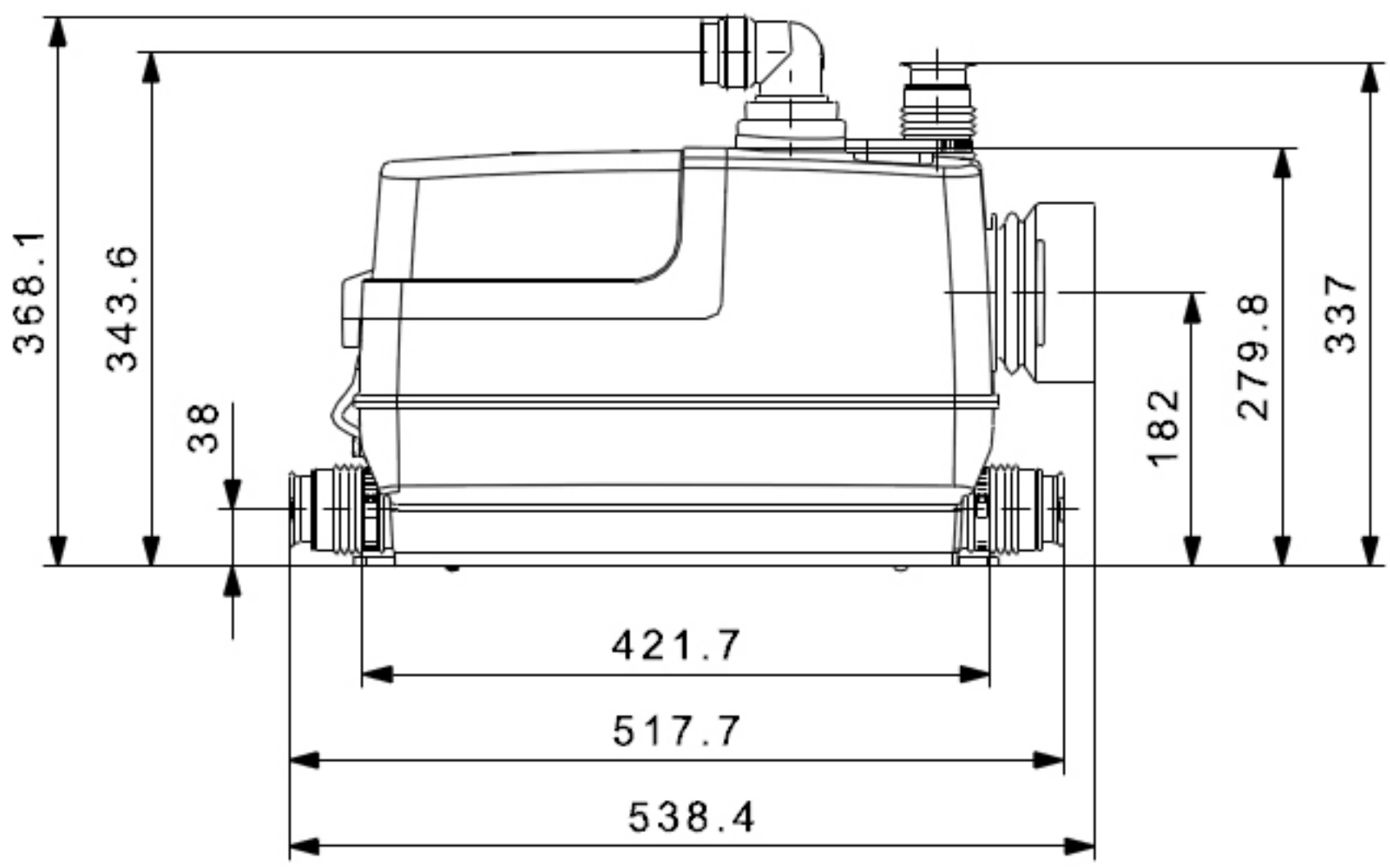
368.1
343.6
38
182
279.8
337
421.7
517.7
538.4

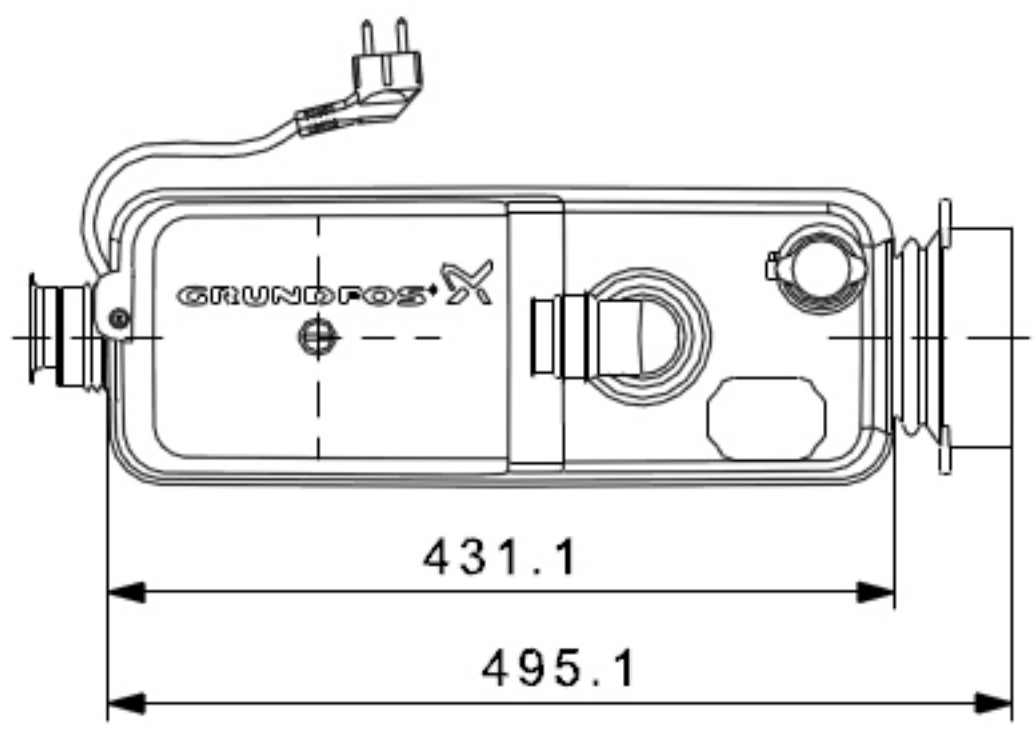
GRUNDFOS
431.1
495.1

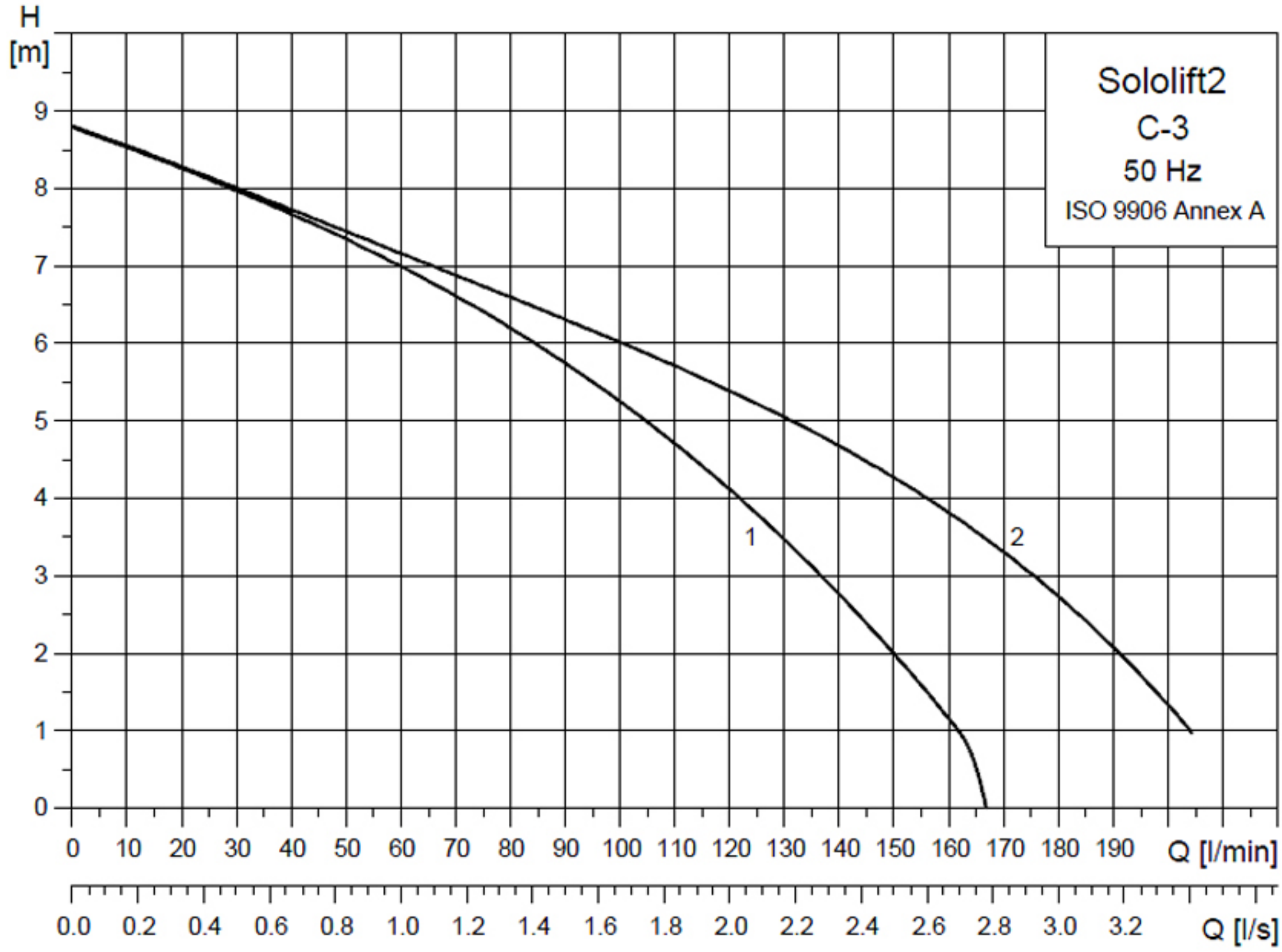
H
[m]
Sololift2
C-3
50 Hz
ISO 9906 Annex A
1
2
Q [l/min]
Q [l/s]

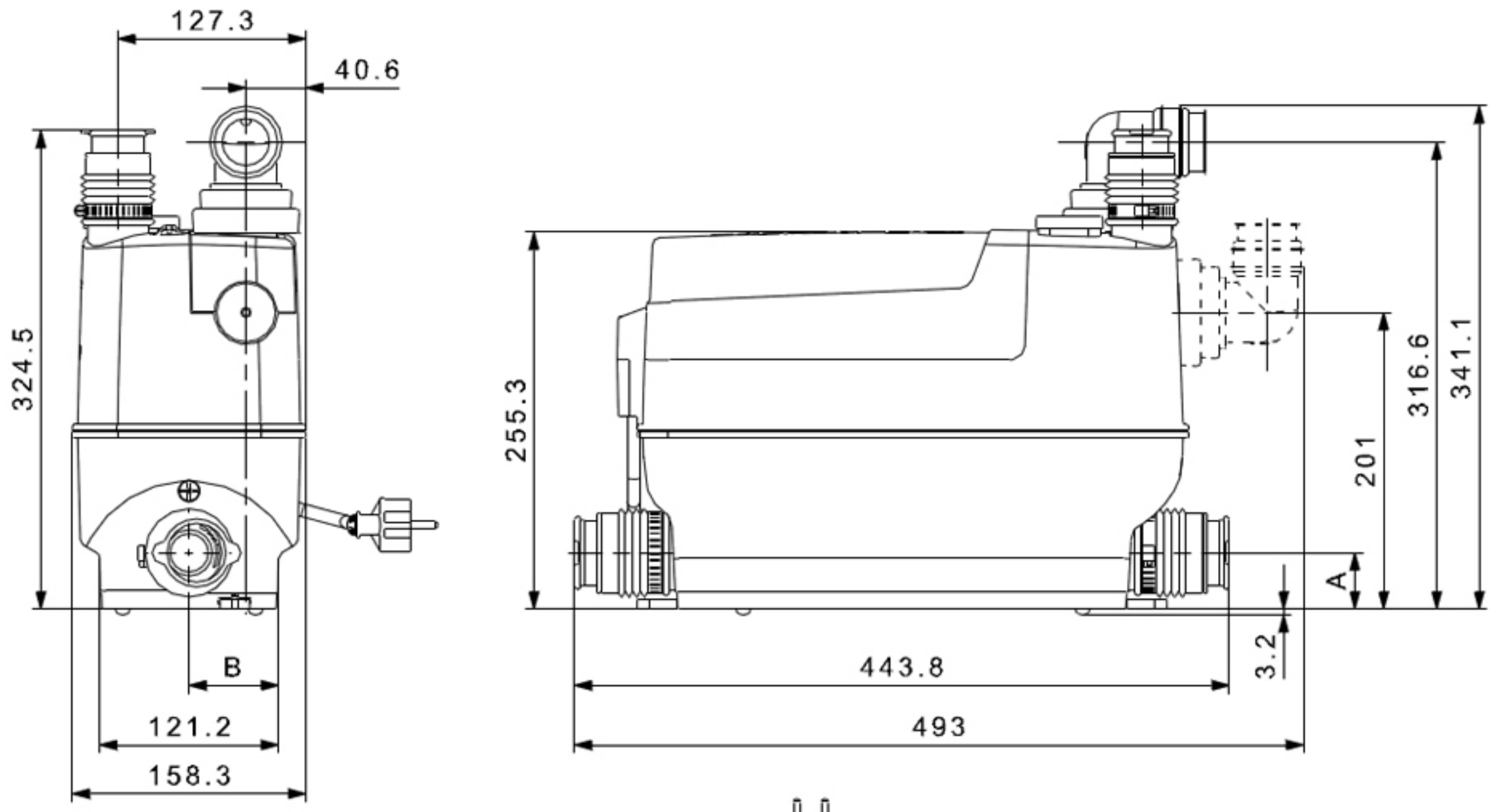
127.3
40.6
324.5
B
121.2
158.3
255.3
443.8
493
316.6
341.1
201
A
3.2

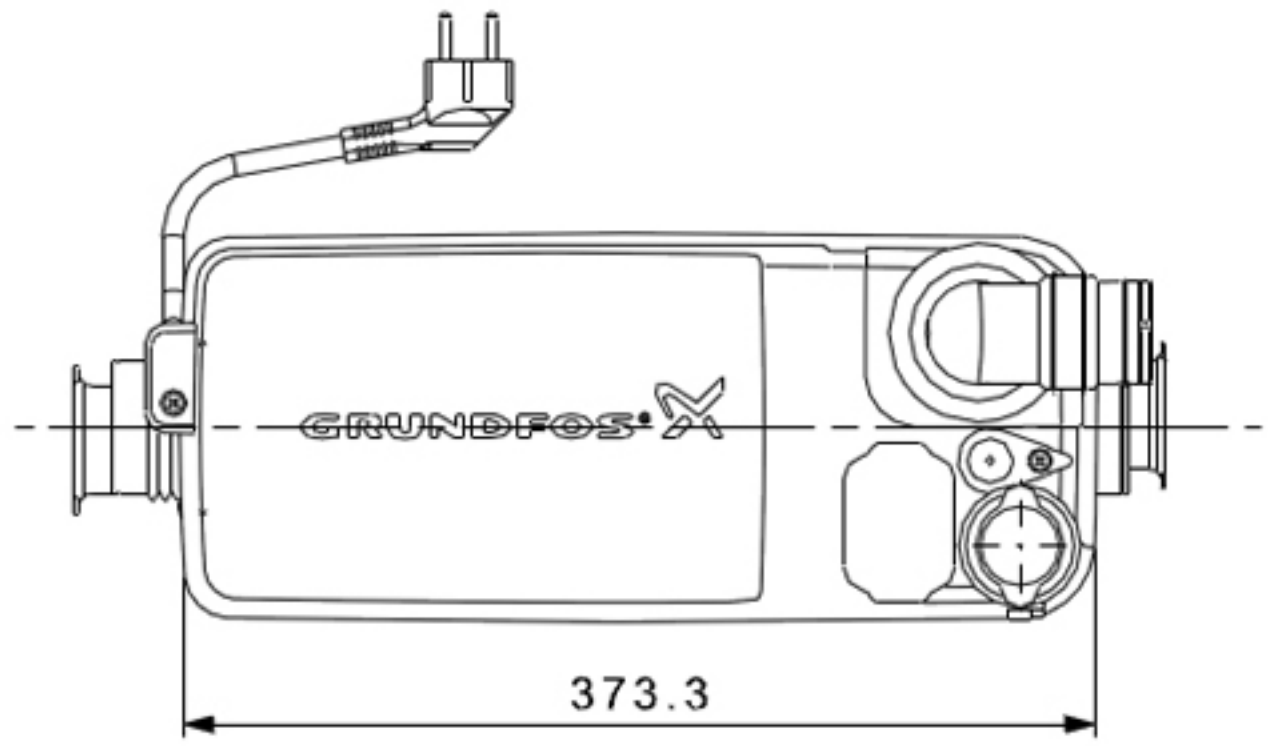
GRUNDFOS
373.3

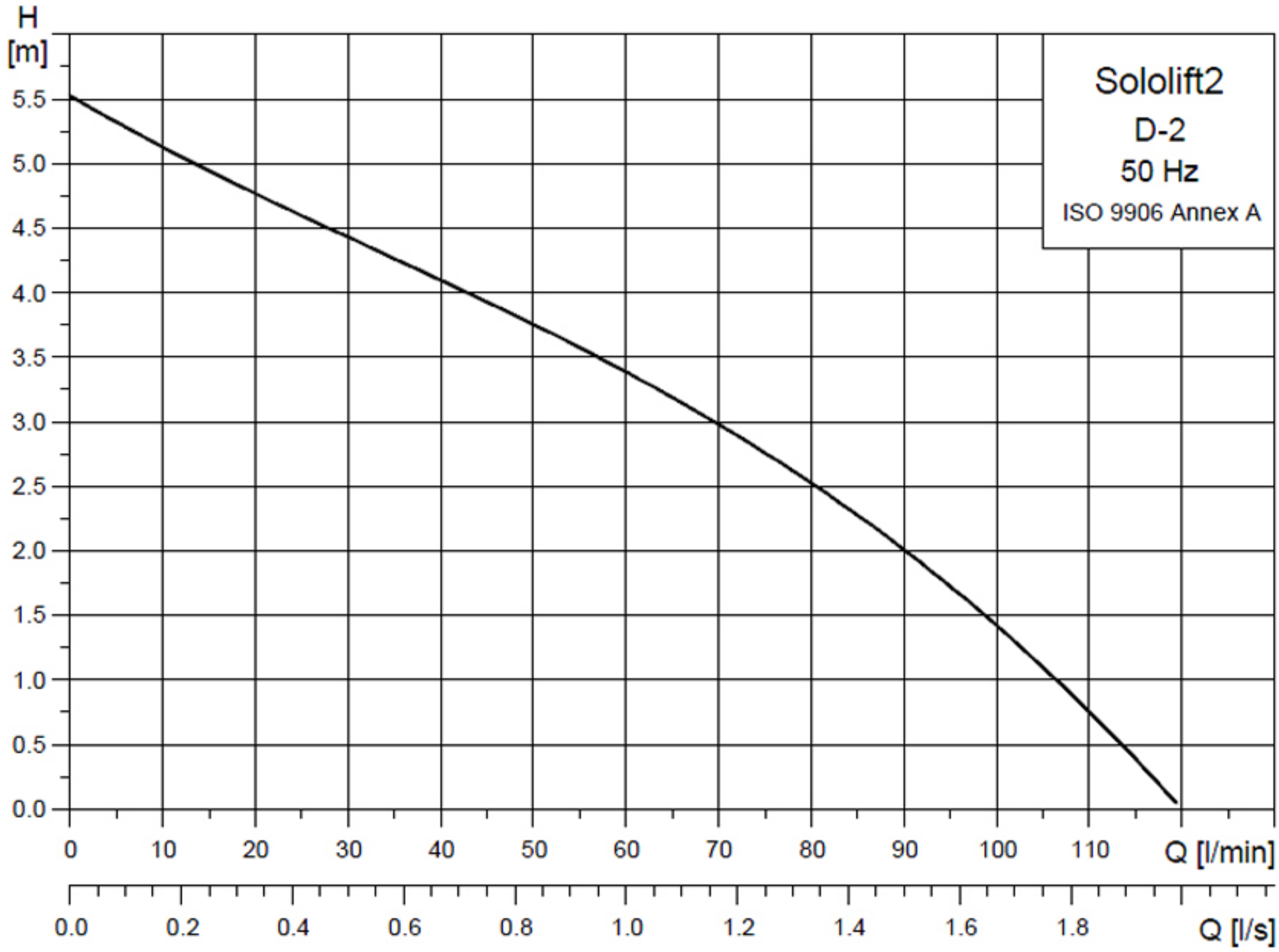
H
[m]
5.5
5.0
4.5
4.0
3.5
3.0
2.5
2.0
1.5
1.0
0.5
0.0
Sololift2
D-2
50 Hz
ISO 9906 Annex A
0
10
20
30
40
50
60
70
80
90
100
110
Q [l/min]
0.0
0.2
0.4
0.6
0.8
1.0
1.2
1.4
1.6
1.8
Q [l/s]

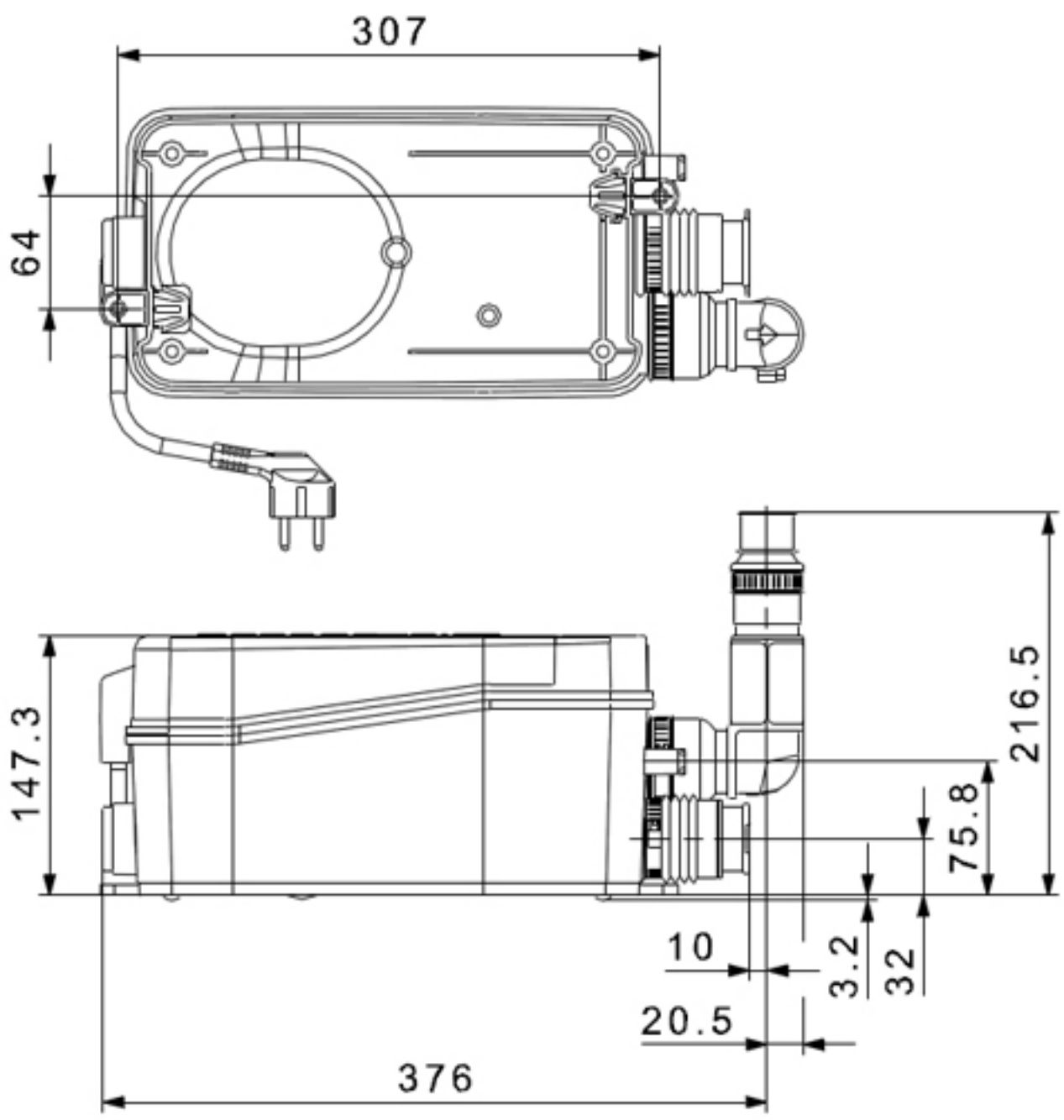
307
64
147.3
216.5
75.8
10
3.2
32
20.5
376

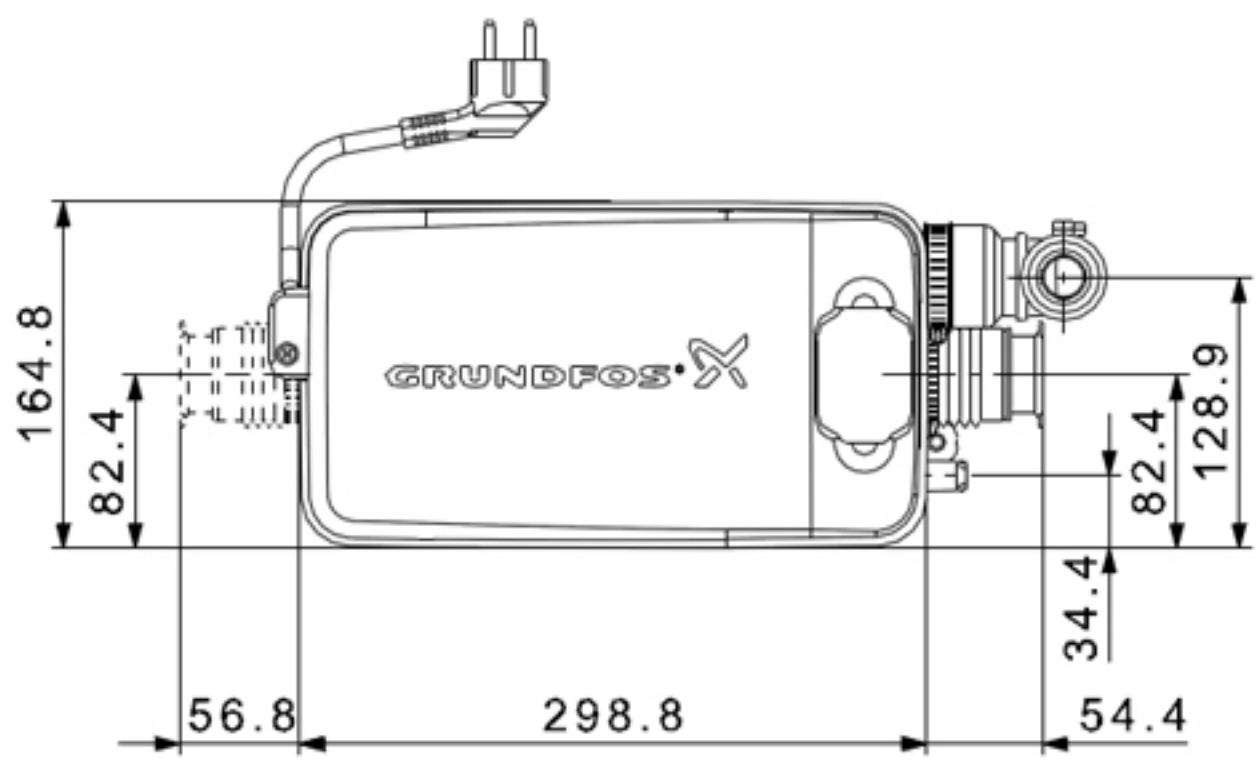
164.8
82.4
82.4
128.9
34.4
56.8
298.8
54.4